DEVELOPMENT AND PRODUCTION OF RADIOACTIVE SOURCES FOR BRACHYTHERAPY APPLICATION

Rostelato, M.E.C.M.; Silva, C.P.; Rela, P.R.; Casiglia, H.T.; Zeituni, C.A.; Feher, A.; Lepki, V.

Centro de Tecnologia das Radiações - IPEN/CNEN-SP

Keywords: Seeds; Brachytherapy; Iodine-125; Brachytherapy sources; Seeds implants; Radioactive sources.

The number of prostate cancer cases in Brazil is increasing and only a small part of the patients are submitted to brachytherapy treatment using Iodine-125 radioactive seeds, that nowadays are imported at a high cost, restricting this application1. The local production of these radioactive sources became a priority in order to reduce the problems of prostate cancer management for end users. Such action will permit to spread the use to a larger number of patients. Due to such reasons, the Nuclear Energy Research Institute established in 1998 a program, in order to produce Iodine-125 radioactive seeds for brachytherapy (FIG.1).

FIGURE 1 - Iodine-125 Seeds-IPEN's Prototype.

In brachytherapy, small seeds with Iodine-125, are implanted into the prostate to irradiate the tumor (FIG.2).

FIGURE 2 - Prostate Seeds Implant.

The Iodine-125 seeds consist of a welded titanium capsule (diameter=0.8mm e length=4.5mm) containing Iodine-125 adsorbed onto a silver rod (FIG.3).

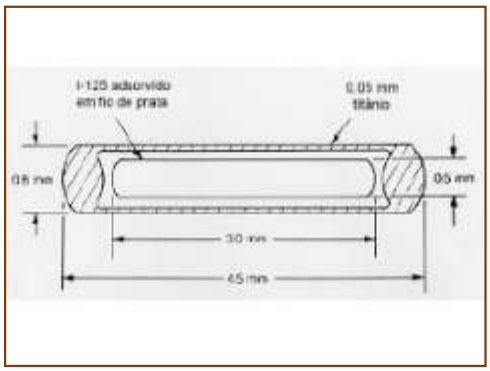

FIGURE 3 - Schematic Diagram Iodine-125 Seed.

Concerning the setup of the local production, the optimization of the following activities have been carried out: superficial treatment of the silver rod, development of a process to absorb the Iodine in the silver rod, welding methodology to seal the seeds, leaking and contamination test and source activity measurement.